PB42BARBED PART SCHEMATIC

Parts

Number	Available Item	Description
5	PBHB4PINX	BED INSERT PANEL (PR)
8	PBHB4HM	HEAD MOTOR
23	PBHB4HEADEXTCD	BARI EXT CORD HEAD MTR-JUNCTION BOX
13	PBHB4HLM	HI-LO MOTOR
15	PBHB4MCASTIN	CASTOR INSERT FOR HB4M
16	PBHB4MCASTWB	CASTOR WITH BRAKE
17	PBHB4FM	FOOT MOTOR
19	PBHB4JB	JUNCTION BOX FOR HB4
20	PBHB4PNDC	HAND RENDANT
26	PBHB4MCAST	CASTOR FOR HB4M
25	PBHB4SBAR	SIDE SUPPORT BARS
Not Shown	PBHB4SHAFT	BARIATRIC BED SHAFT 42" BED ONLY

Bed Frame Kit Components

S2K Item	Parts
PB3000	Head Spring
PB3010	Foot spring, electronics, pendant, crank, side support bars
PB3301	Bed ends, drive shaft & casters

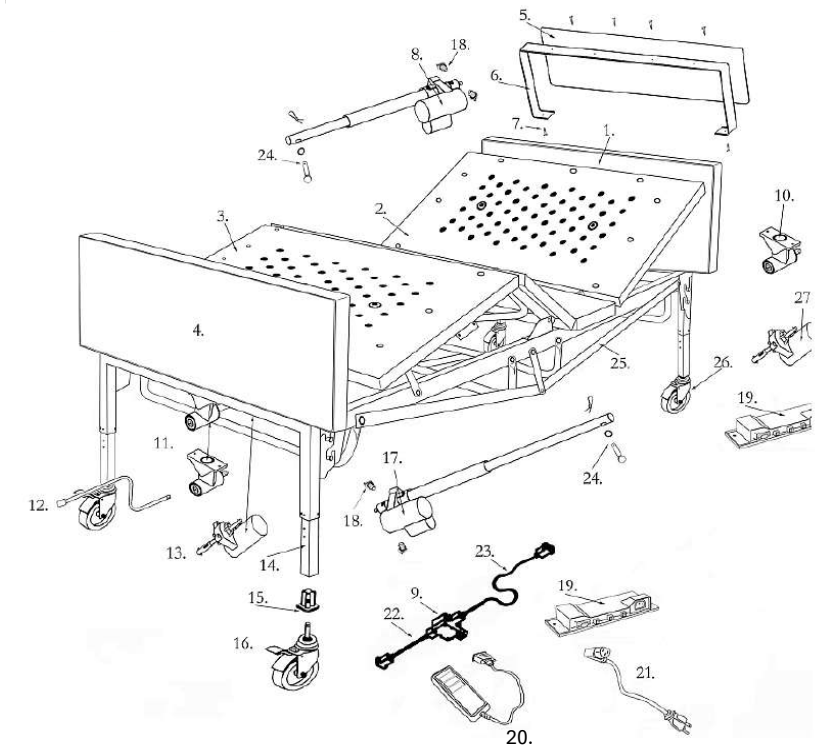

1. *Complete headboard without wheels*
2. *Head end complete with electronics*
3. *Foot end complete with electronics*
4. *Complete footboard without wheels*
5. *Headboard composite wood panel - pair*
6. *Headboard/footboard frame*
7. *Panel frame screws, set of 6*
8. *Head end motor complete with extension tube and actuator*
9. *Headboard gear box*
10. *Head motor extension cord*
11. *Footboard gear box*
12. *Manual crank*
13. *Foot end hi-lo motor*
14. *Adjustable leg*
15. *Receptacle for caster*
16. *Caster with lock*
17. *Foot end motor complete with extension tube and actuator*
18. *Quick release spring knob*
19. *Junction box*
20. *Hand control*
21. *Power cord*
22. *Connection cord*
23. *Head Motor Connection cord*
24. *Connector pin*
25. *Side support bars*
26. *Caster without lock*